SP16 panel mount, IP68 waterproof cable connector

Reference: AM7187
EAN13: -
HS code: 85369010

Product attributes:

Number of pins: 2-pin, 3-pin, 4-pin, 5-pin, 6-pin, 7-pin, 9-pin

Product features:

Housing material: Plastic
Waterproof grade: IP68
Construction: By soldering

Product description:

Waterproof panel connector for wires with a diameter of 5.5 - 8mm. Gold-plated contacts.

Type: SP16	2-pin	3-pin	4-pin	5-pin	7-pin	9-pin
Contact diameter	1.8mm	1.8mm	1mm	1mm	1mm	1mm
Rated current	10A	5A	5A	5A	5A	5A
Rated voltage	250V	250V	250V	250V	250V	250V
Contact resistance	2mΩ	2mΩ	5mΩ	5mΩ	5mΩ	5mΩ
Insulation resistance	2000mΩ	2000mΩ	2000mΩ	2000mΩ	2000mΩ	2000mΩ

Maximum current: 10A

Maximum voltage: 250V AC

Protection: IP68

Working temperature: -20 - 110°C

Relative humidity: 90% - 95%

Material: Polyamide

SP16	02	03	04	05	07	09
Mlae contact face view						
Contact diameter	Ø1.8×2	Ø1.8×3	Ø1×4	Ø1×5	Ø1×7	Ø1×9
Rated current (A)	10A	5A	5A	5A	5A	5A
Rated voltage (AC. V)	250V	250V	250V	250V	250V	250V
Test voltage (AC. V)	1500V	1500V	1500V	1500V	1500V	1500V
Contact resistance (MΩ)	2	2	5	5	5	5
Insulation resistance (MΩ)	2000	2000	2000	2000	2000	2000

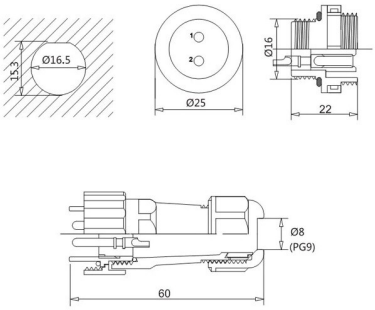
Ø16.5
15.3
1
2
Ø25
Ø16
22
Ø8
(PG9)
60