Mini lever switch MTS-101, ON-OFF, 2-pin

Reference: AM3746
EAN13: -
HS code: 85365080

Product attributes:

Product features:

Current: 3 A
Voltage: Max. 250 V
Waterproof grade: IP20

Product description:

Type: MTS-101

Function: ON-OFF
Max. voltage/current: 125V AC/6A, 250V AC/3A

Mounting hole diameter: 6mm
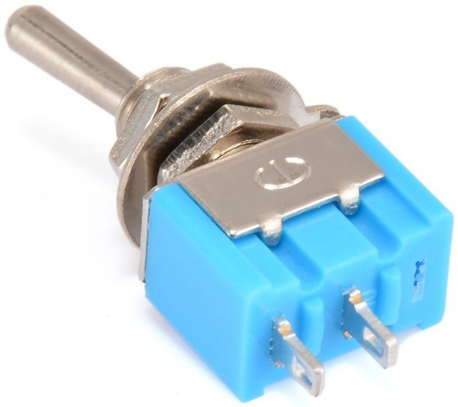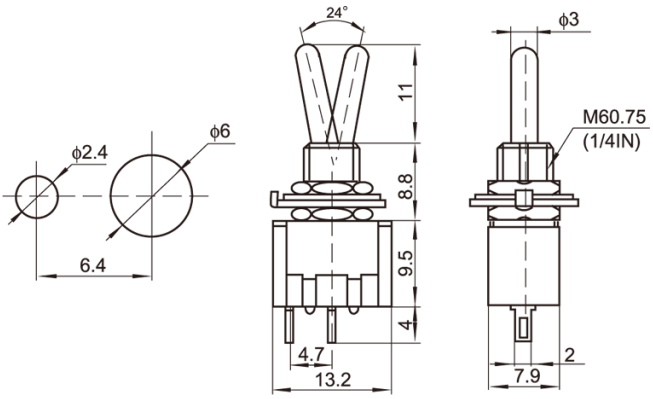
Material metal, plastic