Knob for potentiometers type 3590S

Reference: AM8891
EAN13: -
HS code: 85334090

Product attributes:

Product features:

Waterproof grade: IP40

Product description:

Rotary knob for potentiometers type 3590S. Fixing with steel worm (Allen).

Shaft diameter: 4-6.35mm
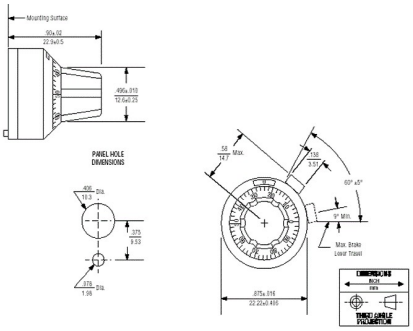
Type: XSN-3